Granada NOVO 48”

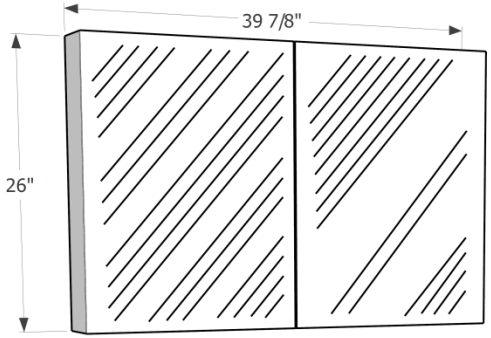

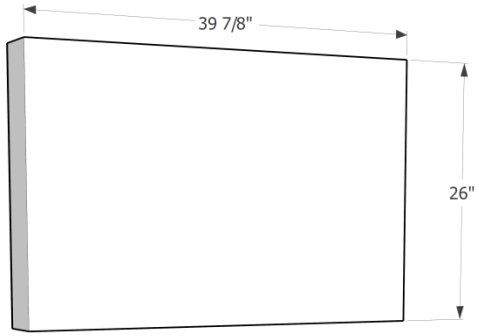

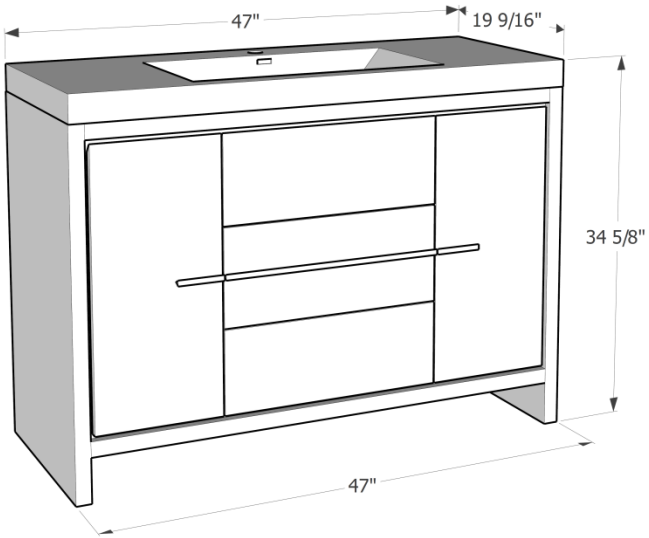

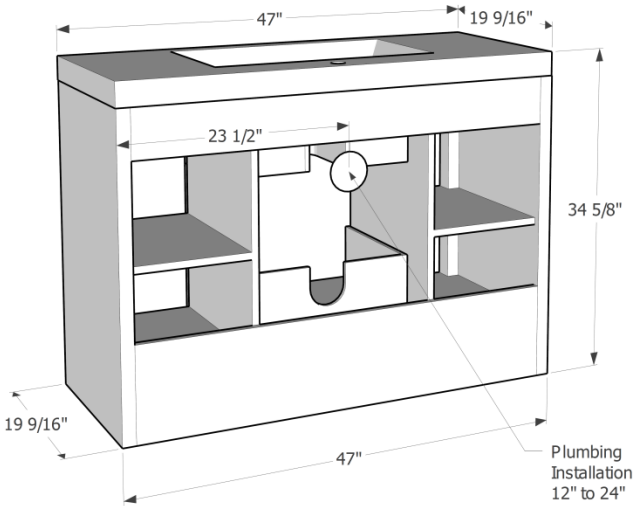

aquamoon

© AQUAMOON. All rights reserved. This material may not be reproduced, displayed, modified or distributed without the express prior written permission of the copyright holder - Small factory variations from the current design may occur.